WEICHU

WEI CHU

CASTOR

HOSPITAL / MEDICAL
INDUSTIAL
STAINLESS STEEL
WHEELS

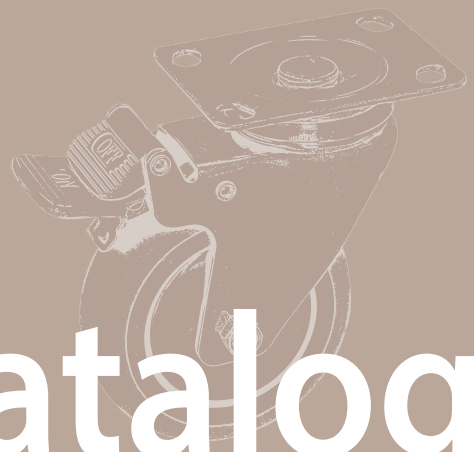

Catalog

CONTENTS

P02 series 115 /series 120 / series 125 / series 130

P06 series 240 /series 250

P08 series 325 /series 330 / series 331 / series 331ST /series 340
series 341 / series 341ST / series 351 /series 351ST

P17 series 430 / series 430ST / series440 / series 440ST
series 450 / series450ST

P23 series 540 /series 540ST

P25 series 625 / series 625ST / series630 / series 630ST

P29 series 730 /series 750

P30 Appendix

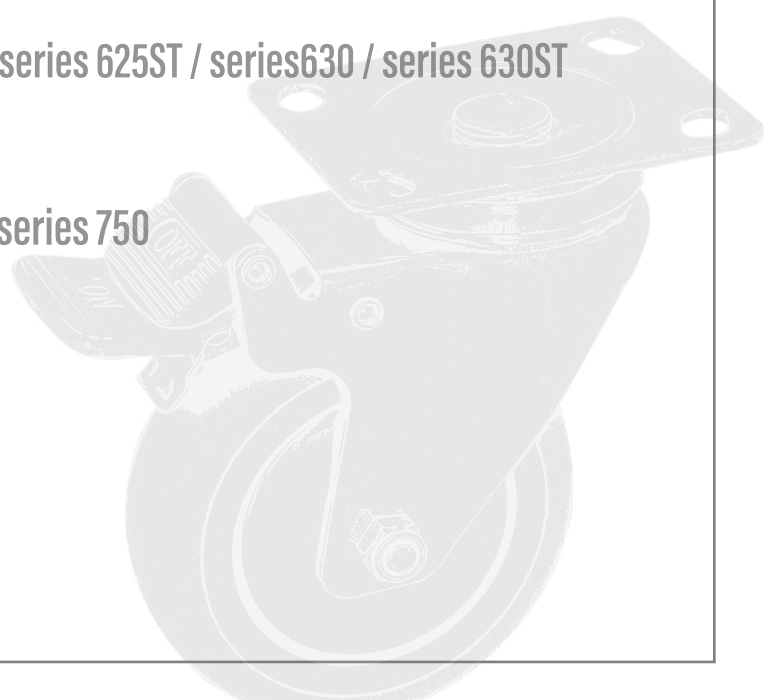

series 115

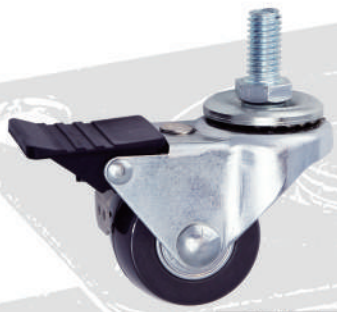

115-1

115-2

mm	mm	mm	Kg
40	23.5	59	30

115-3

115-4

mm	mm	mm	mm	mm	mm	Kg
40	23.5	50x50	38x38	Ø6.5	56	30

115-5

mm	mm	mm	Kg
40	23.5	56	30

SCREW TYPE

3/8”x19 Ø6mm

WHEEL MATERIAL

TPU-Y

TPU-G

series 120

120-1

120-2

mm	mm	mm	Kg
50	23.5	69	40

120-3

120-4

mm	mm	mm	mm	mm	mm	Kg
50	23.5	50x50	38x38	Ø6.5	66	40

120-5

120-6

mm	mm	mm	Kg
50	23.5	68	40

120-7

mm	mm	mm	Kg
50	23.5	66	40

SCREW TYPE

3/8”x19 Ø6mm

WHEEL MATERIAL

TPU-Y

TPU-G

TPR

series 125

125-1

125-2

mm	mm	mm	Kg
63	28	89	50

125-3

125-4

mm	mm	mm	mm	mm	mm	Kg
63	28	60x72 65x75.5 75x93	41x55 47x58 53.5x72	Ø8 Ø8.5 Ø10	86	50

125-5

125-6

mm	mm	mm	Kg
63	28	84	50

125-7

mm	mm	mm	Kg
63	28	86	50

SCREW TYPE

1/2”x25L	1/2”x25Lx13W	3/8”x25L	3/8”x38L
M12x25L	Ø10mm	Ø11/22L	Ø11X38L

WHEEL MATERIAL

TPR(BB)

TPU

series 130

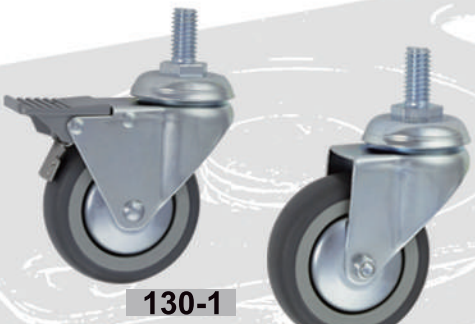

130-1 130-2

mm	mm	mm	Kg
75	25	104	50

130-3 130-4

mm	mm	mm	mm	mm	mm	Kg
75	25	60x72 65x75.5 75x93	41x55 47x58 53.5x72	Ø8 Ø8.5 Ø10	101	50

130-5 130-6

mm	mm	mm	Kg
75	25	99	50

130-7

mm	mm	mm	Kg
75	25	101	50

SCREW TYPE

1/2”x25L 1/2”x25Lx13W M12x25L 3/8”x25L 3/8”38L Ø10MM Ø11x22L Ø11x38L

WHEEL MATERIAL

TPR TPR(BB) TPU RU

series 240

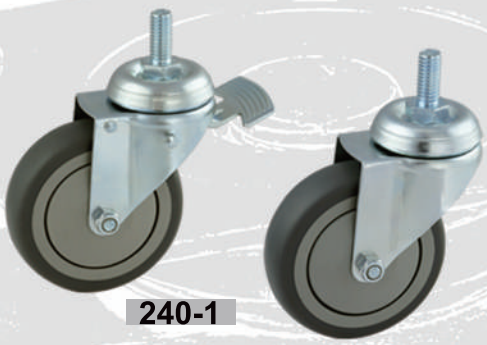

240-1

240-2

mm	mm	mm	Kg
100	31	133	70

240-3

240-4

mm	mm	mm	mm	mm	mm	Kg
100	31	75x93 65x96	53.5x72 45x74	Ø10	130	70

240-5

mm	mm	mm	Kg
100	31	130	70

SCREW TYPE

1/2”x28L 1/2”x25Lx13L M12x25L 3/8”x25L 5/8”x30L M16x25L

WHEEL MATERIAL

TPR TPR(BB) TPU RU RU(BB) NYLON NYLON(BB)

series 250

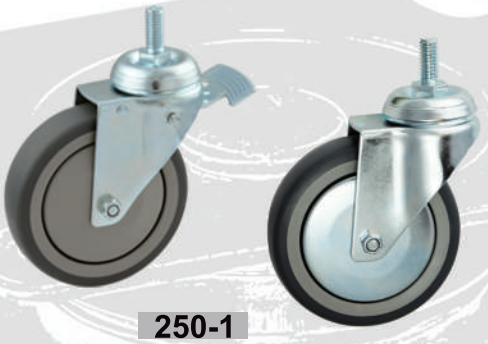

250-1

250-2

mm	mm	mm	Kg
125	32	158	80

250-3

250-4

mm	mm	mm	mm	mm	mm	Kg
125	32	65x96 75x93	45x74 53.5x72	Ø 10	155	80

250-5

mm	mm	mm	Kg
125	32	155	80

SCREW TYPE

1/2”x28L 1/2”x25Lx13W M12x25L 3/8”x25L 5/8”x30L M16x25L 19.4MM

WHEEL MATERIAL

TPR TPR(BB) TPU NYLON NYLON(BB)

series 325

325-1

125-2

mm	mm	mm	Kg
63	28	89	50

325-3

125-4

mm	mm	mm	mm	mm	mm	Kg
63	28	60x72 65x75.5 75x93	41x55 47x58 53.5x72	Ø8 Ø8.5 Ø10	86	50

325-5

125-6

mm	mm	mm	Kg
63	28	84	50

125-7

mm	mm	mm	Kg
63	28	86	50

SCREW TYPE

1/2”x25L	1/2”x25Lx13W	3/8”x25L	3/8”x38L
M12x25L	Ø10mm	Ø11/22L	Ø11X38L

WHEEL MATERIAL

TPR(BB)

TPU

series 330

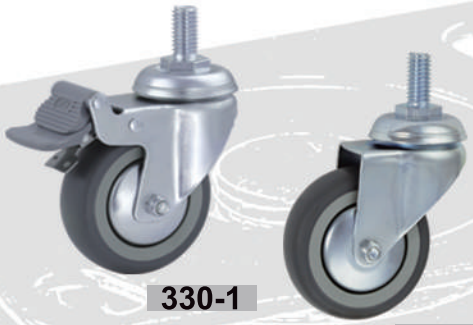

330-1

130-2

mm	mm	mm	Kg
75	25	104	50

330-3

130-4

mm	mm	mm	mm	mm	mm	Kg
75	25	60x72 65x75.5 75x93	41x55 47x58 53.5x72	Ø8 Ø8.5 Ø10	101	50

330-5

130-6

mm	mm	mm	Kg
75	25	99	50

130-7

mm	mm	mm	Kg
75	25	101	50

SCREW TYPE

1/2”x25L	1/2”x25Lx13W	3/8”x25L	3/8”x38L
M12x25L	Ø10mm	Ø11/22L	Ø11X38L

WHEEL MATERIAL

TPR TPR(BB) TPU RU

series 331

331-1

331-2

mm	mm	mm	Kg
75	32	111	80

331-3

331-4

mm	mm	mm	mm	mm	mm	Kg
75	32	65x96 75x93	45x74 53.5x72	Ø10	109	80

331-5

331-6

mm	mm	mm	Kg
75	32	106	80

331-7

mm	mm	mm	Kg
75	32	109	80

SCREW TYPE

1/2”x28L 1/2”x25Lx13W M12x25L 3/8”x25L 5/8”X30L M16x25L

19.4MM 25MM 28MM Ø10MM Ø13MM

WHEEL MATERIAL

TPR(BB)

TPU

NYLON

NYLON(BB)

series 331ST

STAINLESS STEEL

331ST-1

331ST-2

mm	mm	mm	Kg
75	32	111	80-120

331ST-3

331ST-4

mm	mm	mm	mm	mm	mm	Kg
75	32	65x96 75x93	45x74 53.5x72	Ø10	109	80-120

331ST-5

mm	mm	mm	Kg
75	32	109	80-120

SCREW TYPE

1/2”x25L

WHEEL MATERIAL

TPR(BB)

TPU

NYLON

NYLON(BB)

series 340

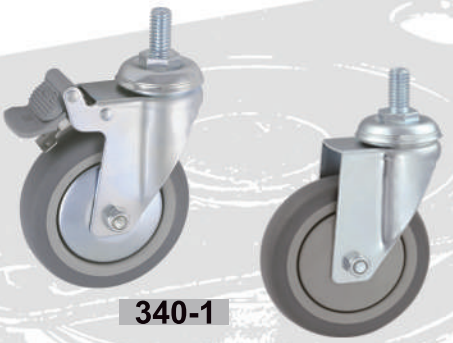

340-1

340-2

mm	mm	mm	Kg
100	25	138	70

340-3

340-4

mm	mm	mm	mm	mm	mm	Kg
100	25	60x72 65x75.5 75x93	41x55 47x58 53.5x72	Ø8 Ø8.5 Ø10	135	70

340-5

340-6

mm	mm	mm	Kg
100	25	133	70

SCREW TYPE

1/2”x25L 1/2”x25Lx13W M12x25L 3/8”x25L 3/8”38L Ø10MM Ø11x22L Ø11x38L

WHEEL MATERIAL

TPR TPR(BB)

series 341

341-1

341-2

mm	mm	mm	Kg
100	31	138	100

341-3

341-4

mm	mm	mm	mm	mm	mm	Kg
100	31	65x96 75x93	45x74 53.5x72	Ø10	135	100

341-5

341-6

mm	mm	mm	Kg
100	31	133	100

341-7

mm	mm	mm	Kg
100	31	135	100

SCREW TYPE

1/2”x28L 1/2”x25Lx13W M12x25L 3/8”x25L 5/8”X30L M16x25L

19.4MM 25MM 28MM Ø10MM Ø13MM

WHEEL MATERIAL

TPR

TPR(BB)

TPU

RU

RU(BB)

NYLON

NYLON(BB)

series 341ST

STAINLESS STEEL

341ST-1

341ST-2

mm	mm	mm	Kg
100	31	138	100-200

341ST-3

341ST-4

mm	mm	mm	mm	mm	mm	Kg
100	31	65x96 75x93	45x74 53.5x72	Ø10	135	100-200

341ST-5

mm	mm	mm	Kg
100	31	135	100-200

SCREW TYPE

1/2”x25L

WHEEL MATERIAL

RU

RU(BB)

TPR

TPR(BB)

TPU

NYLON

NYLON(BB)

series 351

351-1 351-2

mm	mm	mm	Kg
125	32	165	120

351-3 351-4

mm	mm	mm	mm	mm	mm	Kg
125	32	65x96 75x93	45x74 53.5x72	Ø10	163	120

351-5 351-6

mm	mm	mm	Kg
125	32	160	120

351-7

mm	mm	mm	Kg
125	32	163	120

SCREW TYPE

1/2”x28L 1/2”x25Lx13W M12x25L 3/8”x25L 5/8”X30L M16x25L

19.4MM 25MM 28MM Ø10MM Ø13MM

WHEEL MATERIAL

TPR TPR(BB) TPU NYLON NYLON(BB)

series 351ST

STAINLESS STEEL

351ST-1

351ST-2

mm	mm	mm	Kg
125	32	165	120-250

351ST-3

351ST-4

mm	mm	mm	mm	mm	mm	Kg
125	32	65x96 75x93	45x74 53.5x72	Ø10	163	120-250

351ST-5

mm	mm	mm	Kg
125	32	163	120-250

SCREW TYPE

1/2”x25L

WHEEL MATERIAL

TPR TPR(BB) TPU NYLON NYLON(BB)

series 430

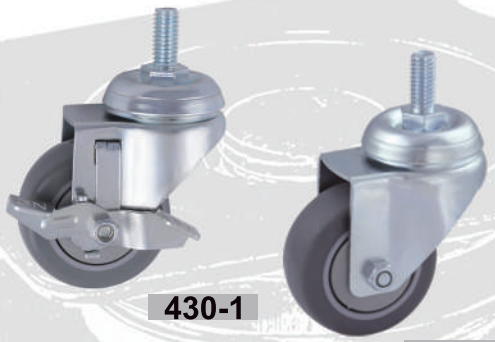

430-1

331-2

mm	mm	mm	Kg
75	32	111	80

430-3

331-4

mm	mm	mm	mm	mm	mm	Kg
75	32	65x96 75x93	45x74 53.5x72	Ø10	109	80

331-7

mm	mm	mm	Kg
75	32	109	80

SCREW TYPE

1/2”x28L 1/2”x25Lx13W M12x25L 3/8”x25L 5/8”X30L M16x25L

19.4MM 25MM 28MM Ø10MM Ø13MM

WHEEL MATERIAL

TPR(BB) TPU NYLON NYLON(BB)

series 430ST

STAINLESS STEEL

430ST-1

331ST-2

mm	mm	mm	Kg
75	32	111	80-120

430ST-3

331ST-4

mm	mm	mm	mm	mm	mm	Kg
75	32	65x96 75x93	45x74 53.5x72	Ø10	109	80-120

331ST-5

mm	mm	mm	Kg
75	32	109	80-120

SCREW TYPE

1/2”x25L

WHEEL MATERIAL

TPR(BB)

TPU

NYLON

NYLON(BB)

series 440

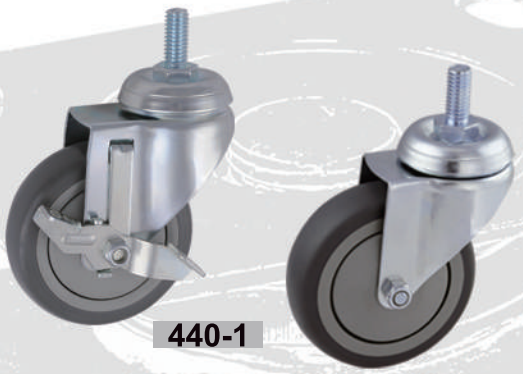

440-1

341-2

mm	mm	mm	Kg
100	31	138	100

440-3

341-4

mm	mm	mm	mm	mm	mm	Kg
100	31	65x96 75x93	45x74 53.5x72	Ø10	135	100

341-7

mm	mm	mm	Kg
100	31	135	100

SCREW TYPE

1/2”x28L 1/2”x25Lx13W M12x25L 3/8”x25L 5/8”X30L M16x25L

19.4MM 25MM 28MM Ø10MM Ø13MM

WHEEL MATERIAL

TPR TPR(BB) TPU RU RU(BB) NYLON NYLON(BB)

series 440ST

STAINLESS STEEL

440ST-1

341ST-2

mm	mm	mm	Kg
100	31	138	100-200

440ST-3

341ST-4

mm	mm	mm	mm	mm	mm	Kg
100	31	65x96 75x93	45x74 53.5x72	Ø10	135	100-200

341ST-5

mm	mm	mm	Kg
100	31	135	100-200

SCREW TYPE

1/2”x25L

WHEEL MATERIAL

RU

RU(BB)

TPR

TPR(BB)

TPU

NYLON

NYLON(BB)

series 450

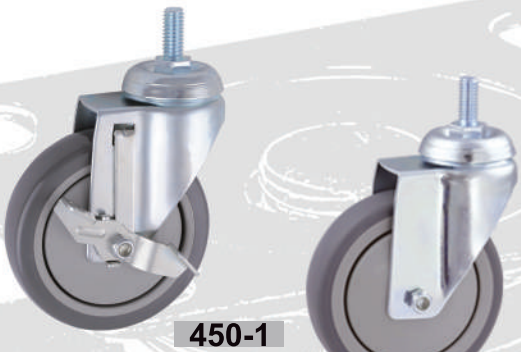

450-1

351-2

mm	mm	mm	Kg
125	32	165	120

450-3

351-4

mm	mm	mm	mm	mm	mm	Kg
125	32	65x96 75x93	45x74 53.5x72	Ø10	163	120

351-7

mm	mm	mm	Kg
125	32	163	120

SCREW TYPE

1/2”x28L 1/2”x25Lx13W M12x25L 3/8”x25L 5/8”X30L M16x25L

19.4MM 25MM 28MM Ø10MM Ø13MM

WHEEL MATERIAL

TPR TPR(BB) TPU NYLON NYLON(BB)

series 450ST

STAINLESS STEEL

450ST-1

351ST-2

mm	mm	mm	Kg
125	32	165	120-250

450ST-3

351ST-4

mm	mm	mm	mm	mm	mm	Kg
125	32	65x96 75x93	45x74 53.5x72	Ø10	163	120-250

351ST-5

mm	mm	mm	Kg
125	32	163	120-250

SCREW TYPE

1/2”x25L

WHEEL MATERIAL

TPR

TPR(BB)

TPU

NYLON

NYLON(BB)

series 540

540-1

341-2

mm	mm	mm	Kg
100	31	138	100

540-3

341-4

mm	mm	mm	mm	mm	mm	Kg
100	31	65x96 75x93	45x74 53.5x72	Ø10	135	100

540-5

341-6

mm	mm	mm	Kg
100	31	133	100

341-7

mm	mm	mm	Kg
100	31	135	100

SCREW TYPE

1/2”x28L 1/2”x25Lx13W M12x25L 3/8”x25L 5/8”X30L M16x25L

19.4MM 25MM 28MM Ø10MM Ø13MM

WHEEL MATERIAL

TPR TPR(BB) TPU RU RU(BB) NYLON NYLON(BB)

series 540ST

STAINLESS STEEL

540ST-1

341ST-2

mm	mm	mm	Kg
100	31	138	100-200

540ST-3

341ST-4

mm	mm	mm	mm	mm	mm	Kg
100	31	65x96 75x93	45x74 53.5x72	Ø10	135	100-200

341ST-5

mm	mm	mm	Kg
100	31	135	100-200

SCREW TYPE

1/2”x25L

WHEEL MATERIAL

RU

RU(BB)

TPR

TPR(BB)

TPU

NYLON

NYLON(BB)

series 625

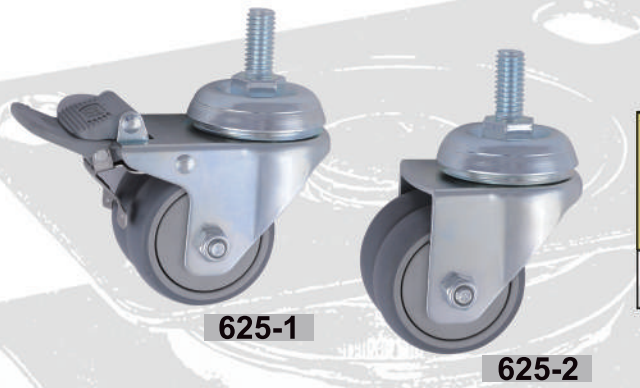

625-1 625-2

mm	mm	mm	Kg
63	28	97	100

625-3 625-4

mm	mm	mm	mm	mm	mm	Kg
63	28	75x93 65x96	53.5x72 45x74	Ø 10	95	100

625-5 625-6

mm	mm	mm	Kg
63	28	92	100

SCREW TYPE

1/2”x28L 1/2”x25Lx13W M12x25L 3/8”x25L 5/8”X30L M16x25L

19.4MM 25MM 28MM Ø10MM Ø13MM

WHEEL MATERIAL

TPR(BB)

series 625ST

STAINLESS STEEL

625ST-1

625ST-2

mm	mm	mm	Kg
63	28	97	100

625ST-3

625ST-4

mm	mm	mm	mm	mm	mm	Kg
63	28	65x96 75x93	45x74 53.5x72	Ø10	95	100

625ST-5

625ST-6

mm	mm	mm	Kg
63	28	92	100

SCREW TYPE

1/2”x25L

WHEEL MATERIAL

TPR(BB)

series 630

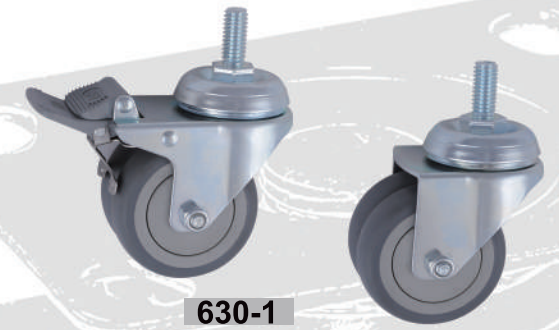

630-1

630-2

mm	mm	mm	Kg
75	25	107	100

630-3

630-4

mm	mm	mm	mm	mm	mm	Kg
75	25	65x96 75x93	45x74 53.5x72	Ø10	105	100

630-5

630-6

mm	mm	mm	Kg
75	25	102	100

SCREW TYPE

1/2”x28L 1/2”x25Lx13W M12x25L 3/8”x25L 5/8”X30L M16x25L

19.4MM 25MM 28MM Ø10MM Ø13MM

WHEEL MATERIAL

TPR(BB) TPU

series 630ST

STAINLESS STEEL

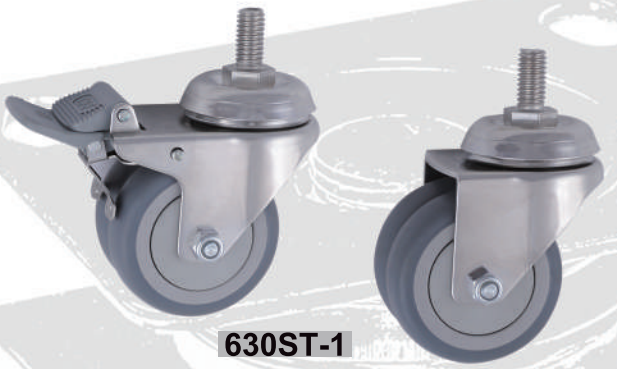

630ST-1

630ST-2

mm	mm	mm	Kg
75	25	107	100

630ST-3

630ST-4

mm	mm	mm	mm	mm	mm	Kg
75	25	65x96 75x93	45x74 53.5x72	Ø10	105	100

630ST-5

630ST-6

mm	mm	mm	Kg
75	25	102	100

SCREW TYPE

1/2”x25L

WHEEL MATERIAL

TPR(BB)

TPU

series 730

730-1

mm	mm	mm	mm	mm	mm	Kg
75	25	60x72 65x75.5	41x55 47x58	Ø 8 Ø 8.5	101	50

730-2

mm	mm	mm	Kg
75	25	103	50

SCREW TYPE

1/2”x25L	3/8”x25L	3/8”x38L	1/2”x25Lx13W
M12x25L	Ø11x22L	Ø11x38L	

WHEEL MATERIAL

TPR TPR(BB) TPU RU

series 750

750-1

mm	mm	mm	mm	mm	mm	Kg
125	32	65x96 75x93	45x74 53.5x72	Ø10	163	120

750-2

mm	mm	mm	Kg
125	32	165	120

SCREW TYPE

1/2”x28L	1/2”x25Lx13W	M12x25L	M16x25L
5/8”x30L	19.4MM	25MM	28MM

WHEEL MATERIAL

TPR TPR(BB) TPU NYLON NYLON(BB)

Appendix - Top Plate Dimensions

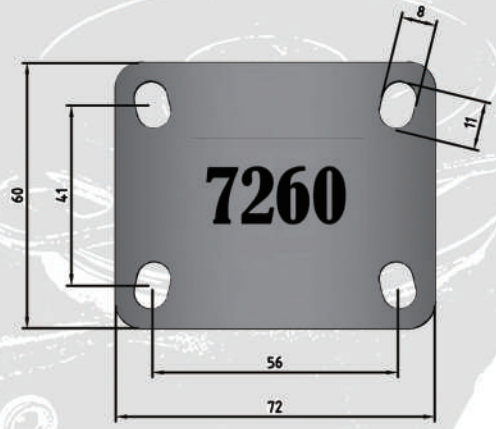

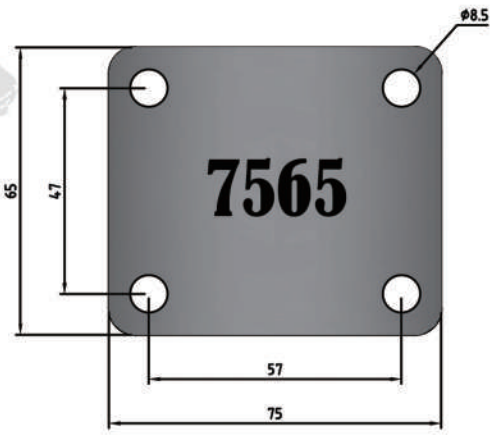

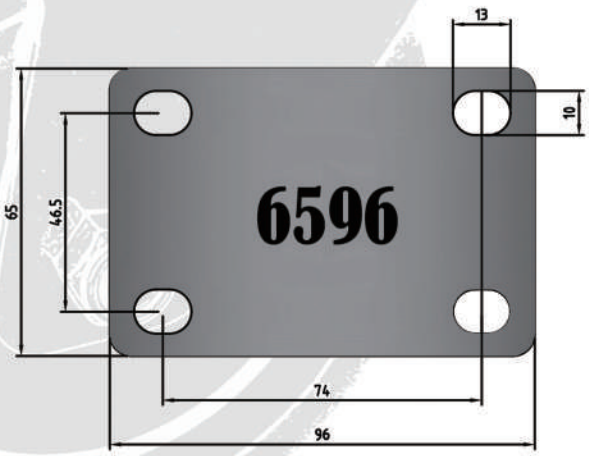

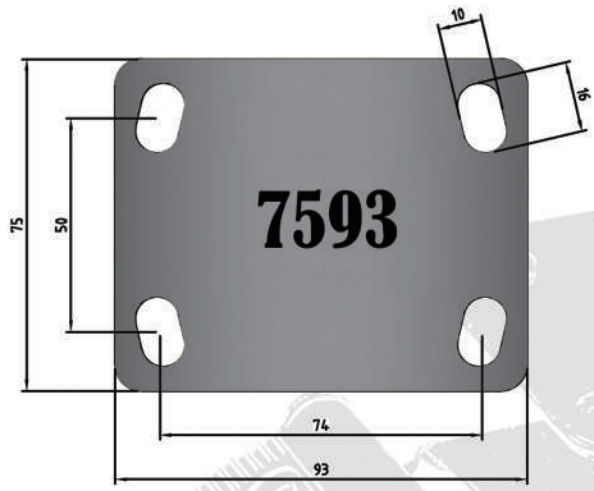

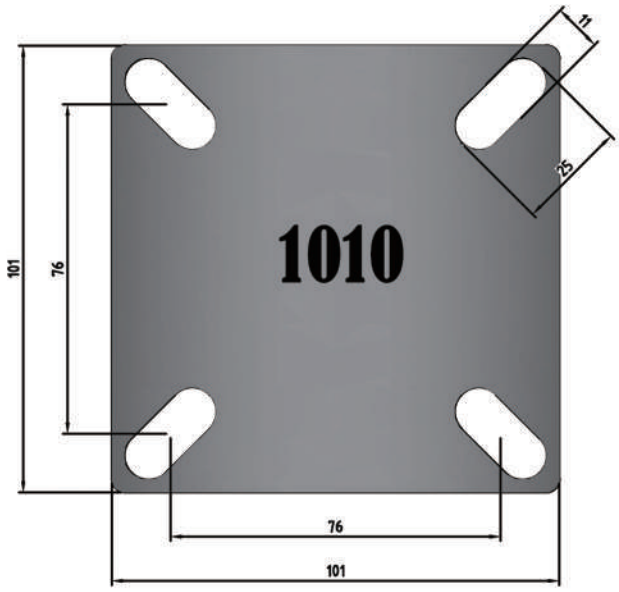

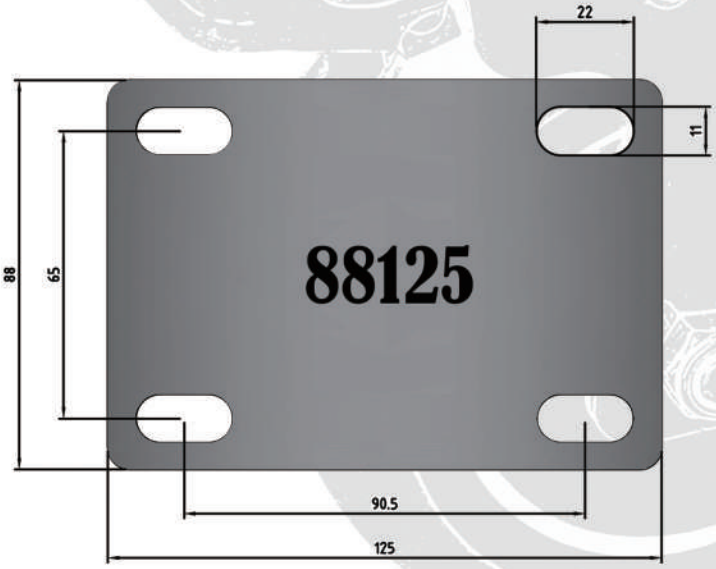

WEICHU

偉取實業有限公司

Address：
新北市八里區觀海大道233號
No.233, Guanhai Blvd., Bali Dist., New Taipei City 249, Taiwan (R.O.C.)
TEL：+886-2-8630-3431
FAX：+886-2-8630-4601
Email：weichucastor@yahoo.com.tw